AFE®
Electronic

Main Feature

1. Small size (24x10x25 in mm) produces a switching capacity up to 10A for high density P.C.Board mounting technique.
2. The contact form construction is 1a
3. The Surge Resistance of BSA1 series is 10,000V
4. Sealing Construction (Free from dust and solder flux): BSA1-S: Flow Solder Type.
5. The selection of plastic insulation material is designed for high temperature and provides better chemical solution performance.

Application

Air Conditioning, Fridge, Washing Machine, etc Household Appliances

Contact Rating

- Nominal Load(Resistive Load Cos Φ =1)
  Contact Capacity
  BSA1-DM……10A at 250VAC
  10A at 30VDC
  BSA1-LM……5A at 250VAC
  5A at 30VDC
- Max. Allowable Current
  BSA1-DM……10A
  BSA1-LM……5A
- Max. Allowable Voltage
  BSA1-DM/LM……AC250V DC30V
- Max. Allowable Power Force
  BSA1-DM……2,500VA 300W
  BSA1-LM……1,250VA 150W
- Contact Material…….. Ag Alloy
- Contact Form…….. …SPST

Performance (at Initial Value)

- Contact Resistance……≤50mΩ at 6VDC/1A
- Operate Time……..10ms. Max
- Release Time…….. 5ms. Max
- Dielectric Strength:
  Between Coil & Contact……..4,500VAC at 50/60 Hz for one minute
  Between Contacts……1,000VAC at 50/60 Hz for one minute
- Surge Resistance……10,000V (between Coil & Contact 1.2x50 μs)
- Insulation Resistance……100 Mega Ω Min. at 500VDC
- Max. On/Off Switching:
  Electrical……30 Ops per minute
  Mechanical……300 Ops per minute
- Temperature Range…… －30~70°C
- Humidity Range……45~85% RH
- Coil Temperature Rise…….. 35°C Maximum
- Vibration:
  Endurance……..10 to 55 Hz dual amplitude width 1.5mm
  Error Operation……..10 to 55 Hz dual amplitude width 1.5mm
- Shock:
  Endurance…… 981m/s^2 Min
  Error Operation…… 98.1m/s^2 Min
- Life Expectancy:
  Electrical……10^5 Operations at Rated Resistive load
  Mechanical……10^7 Operations at No load condition
- Weight……about 11g

Safety Standard & Its File Number

- UL……申请中
- CQC……申请中

AFE®
Electronic

Coil Specification (at 20 °C)

Coil Sensitivity	Nominal Voltage (VDC)	Nominal Current (mA)	Coil Resistance (Ω±8%)	Power Consumption (W)	Pull-In Voltage (VDC)	Drop-Out Voltage (VDC)	Maximum Allowable Voltage (VDC)
BSA1-DM	5	108.7	46	Abt. 0.54	75% Maximum	10% Minimum	130%
	6	89.6	67				
	9	60	150				
	12	44.4	270				
	24	21.8	1100				
	48	11.2	4270				
BSA1-LM	5	50	100	Abt. 0.25			
	6	41.7	144				
	9	27.8	324				
	12	20.7	580				
	24	10.4	2300				
	48	5.2	9216				

Ordering Information

BSA1 - S - 1 12 D M	
Contact Form:	**M:**One form A
Coil Type:	**D**: Standard DC Coil **L**: High Sensitivity DC Coil
Coil Voltage:	**05:**5V,**06:**6V,**09:**9V,**12:**12V,**24:**24V,**48:**48V
Number of Pole:	**1:**One Pole
Type of Sealing:	**S:**How Solder Type
Type:	**BSA1**

Classificatio

Model	BSA1	
Coil Sensitivity	Standard DC Coil	High Sensitivity DC Coil
	1A	1A
Flow Solder Type	BSA1 -S-1□□DM	BSA1-S-1□□LM
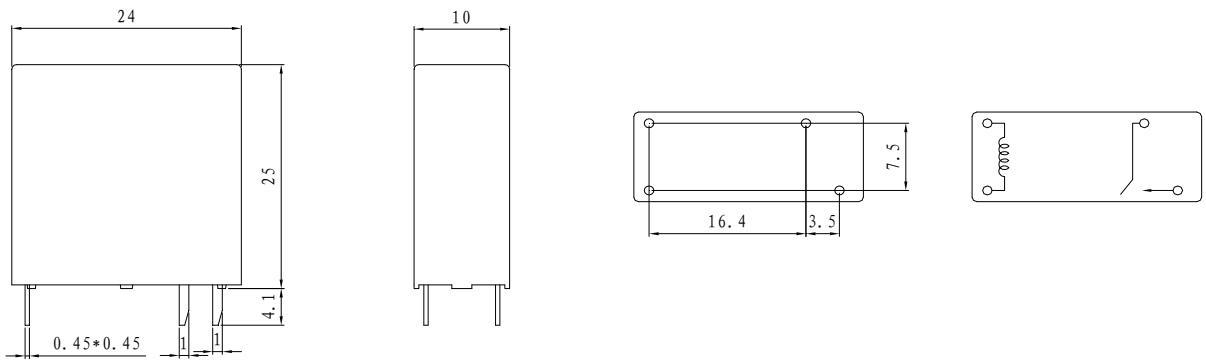
Dimension